Flexible Hose Fittings

c UL us LISTED FM APPROVED SANT

Safe & Reliable, Easy and Quick installation, Economizing on cost, Environmental Friendly

10X Faster
10 times time saving against traditional installation

100% Tested
100% leak tested prior to despatch

Earthquake
Reducing the damage in the earthquake

Unbraided Hose with Straight Nipple

c UL us LISTED

Connection
DN25 x DN15 or DN20 (1″ x 1/2″ or 3/4″)

Max. Service Pressure
14 Bar / 200 PSI

Max. Ambient Temp.
107°C / 225°F

Braided Hose with Straight Nipple

c UL us LISTED FM APPROVED

Connection
DN25 x DN15 or DN20 (1″ x 1/2″ or 3/4″)

Max. Ambient Temp.
107°C / 225°F

cULus listing data			
Nom. Inlet by Outlet	Assembly Length	Max. No. of 90º Bends	Equivalent Length of 1 in. Schedule 40 Steel Pipe(C=120)
in.	ft. / mm	n x 90º	ft.
1x1/2	2.3(700)	2	32
1x1/2	3.3(1000)	3	55
1x1/2	3.9(1200)	3	64
1x1/2	4.9(1500)	3	75
1x1/2	5.9(1800)	3	81
1x3/4	2.3(700)	2	31
1x3/4	3.3(1000)	3	50
1x3/4	3.9(1200)	3	57
1x3/4	4.9(1500)	3	68
1x3/4	5.9(1800)	3	79

cULus listing data | Minimum Bend Radius 3"(76mm) | 200psi | 225°F			
Nom. Inlet by Outlet	Assembly Length	Max. No. of 90º Bends	Equivalent Length of 1 in. Schedule 40 Steel Pipe(C=120)
in.	ft. / mm	n x 90º	ft.
1x1/2	2.3(700)	3	18
1x1/2	3.3(1000)	5	23
1x1/2	3.9(1200)	7	29
1x1/2	4.9(1500)	9	39
1x1/2	5.9(1800)	12	50
1x3/4	2.3(700)	3	20
1x3/4	3.3(1000)	5	24
1x3/4	3.9(1200)	7	31
1x3/4	4.9(1500)	9	40
1x3/4	5.9(1800)	12	70

FM approval data | Minimum Bend Radius 9"(230mm) | 175psi | 225°F					
NPT	k-Factor	Minimum Bend Radius	Max. No. of 90º Bends	Hose Assembly length	Equivalent Length of 1 in. Schedule 40 Steel Pipe
in.		in. / mm	n x 90º	ft.	ft.(m)
1/2	5.6	9 (230)	1	2.3	22.9 (6.9)
1/2	5.6	9 (230)	2	3.3	34.6 (10.5)
1/2	5.6	9 (230)	3	3.9	41.0 (12.5)
1/2	5.6	9 (230)	4	4.9	50.4 (15.3)
1/2	5.6	9 (230)	4	5.9	58.5 (17.8)
3/4	8.0	9 (230)	1	2.3	15.7 (4.8)
3/4	8.0	9 (230)	2	3.3	26.9 (8.2)
3/4	8.0	9 (230)	3	3.9	34.8 (10.6)
3/4	8.0	9 (230)	4	4.9	43.8 (13.5)
3/4	8.0	9 (230)	4	5.9	53.4 (16.2)

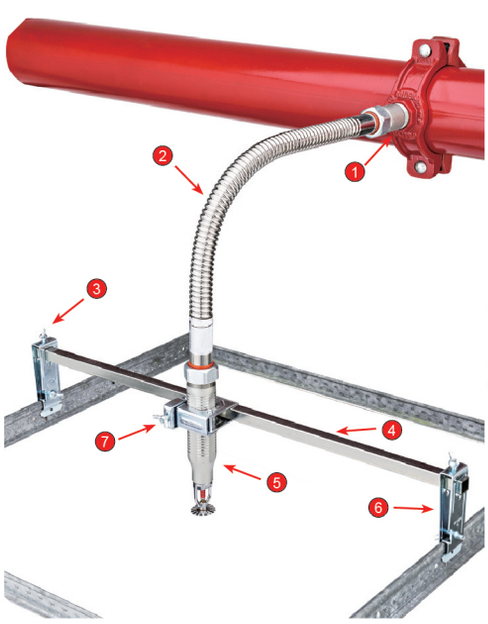

Description	Material
Corrugated Tube	Stainless Steel 304
Braid Sleeving	Stainless Steel 304
Discharge Nipple (Reducing Nipple / Outlet)	Carbon Steel, Zinc Plated
Inlet Nipple	Carbon Steel, Zinc Plated
Slip Nut	Carbon Steel, Zinc Plated
Isolation Ring	Nylon
Gasket	Silicone or EPDM
Center Bracket	Carbon Steel, Zinc Plated
Side Bracket	Carbon Steel, Zinc Plated
Bolts & Screws for side bracket	Carbon Steel, Zinc Plated